GAUGE VALVE 20mm, 25mm (3/4inch, 1inch)

●20mm (3/4inch)

Flanged Elbow

●25mm (1inch)

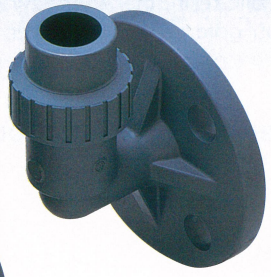

●25mm (1inch)

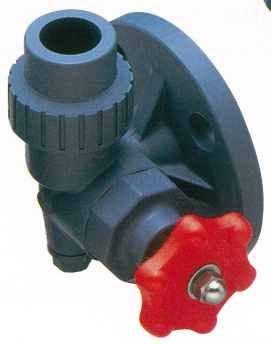

FEATURES

Backflow Prevention

- The contact surface is sealed with an anti-corrosive diaphragm.
- The gauge pipe can easily be installed by inserting the pipe and tightening the union nut.
- The GAUGE VALVE has a drain plug G1/4 in diameter which helps to maintain the valve
  (Sampling is possible by removing the plug).

SPECIFICATIONS

Unit:mm

Nominal Size	20mm (3/4inch)	25mm (1inch)
Gauge Pipe Outer Size	18	26

Body material	Unplasticized Polyvinyl Chloride(PVC), Polypropylene (PP)
Nominal Size	20mm(3/4inch) - 25mm(1inch)
Working Temperature	PVC:0℃ - 50℃(30°F - 120°F), PP :−20℃ - 80℃(−5°F - 175°F)
Max. Working Pressure	0.5MPa{5.1kgf/cm²}[70PSI]

WORKING PRESSURE VS. TEMPERATURE

GAUGE VALVE

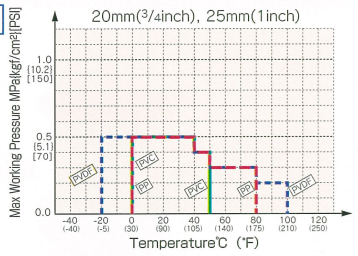

DIMENSIONS

●20mm (3/4inch)

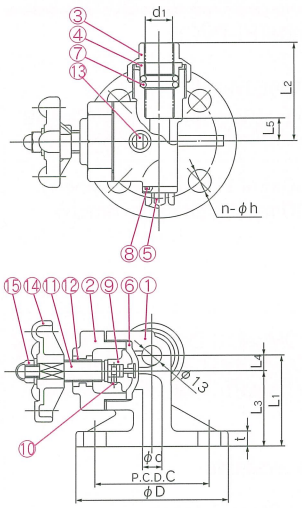

●25mm (1inch)

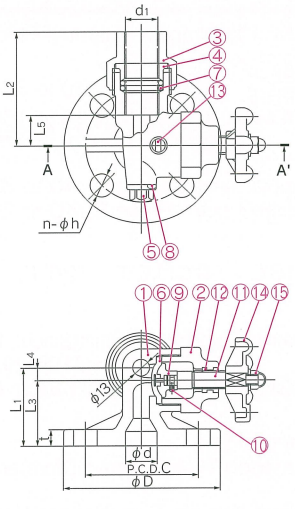

Flanged Elbow

●25mm (1inch)

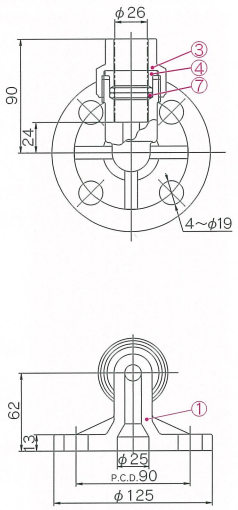

PARTS & MATERIALS

No.	DESCRIPTION	Pcs.	MATERIAL
①	BODY	1	PVC,PP
②	BONNET	1	PVC,PP
③	GLAND NUT	1	PVC,PP
④	GLAND	1	PVC,PP
⑤	DRAIN PLUG	1	PVC,PP
⑥	DIAPHRAGM	1	EPDM,PTFE,Others
⑦	O-RING(A)	2	EPDM,PTFE,Others
⑧	O-RING(B)	1	EPDM,PTFE,Others
⑨	COMPRESSOR	1	PVDF
⑩	COMPRESSOR PIN	2	STAINLESS STEEL304
⑪	STEM	1	COPPER ALLOY(C3604)
⑫	INSERTED METAL OF BONNET	1	COPPER ALLOY(C3604)
⑬	INDICATION OF MATERIAL	1	PAPER
⑭	HAND WHEEL	1	PP
⑮	NUT	1	STAINLESS STEEL304

DIMENSIONS TABLE

JIS Unit:mm

Nominal Size mm	Nominal Size inch	d	JIS 10K D	JIS 10K C	JIS 10K n	JIS 10K h	L1	L2	L3	L4	L5	t	d1
20	3/4	13	100	75	4	15	60	64	50	10	15	10	18
25	1	25	125	90	4	19	62	90	52	10	24	13	26

DIN Unit:mm

Nominal Size mm	Nominal Size inch	d	DIN PN 10 D	DIN PN 10 C	DIN PN 10 n	DIN PN 10 h	L1	L2	L3	L4	L5	t	d1
20	3/4	13	105	75	4	14	60	64	50	10	15	10	18
25	1	25	115	85	4	14	62	90	52	10	24	13	26

ANSI Unit:inch

Nominal Size inch	Nominal Size mm	d	ANSI CLASS 150 D	ANSI CLASS 150 C	ANSI CLASS 150 n	ANSI CLASS 150 h	L1	L2	L3	L4	L5	t	d1
3/4	20	0.51	3.88	2.75	4	0.62	2.36	2.52	1.97	0.39	0.59	0.39	0.71
1	25	0.98	4.25	3.12	4	0.62	2.44	3.54	2.05	0.39	0.94	0.51	1.02